LookOurWay

12' Trade Show Tower w/ Round Hanging Banner

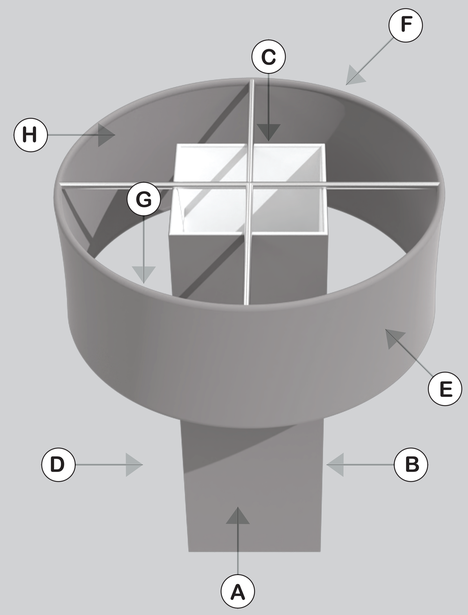

Round Hanging Banner

Front (Outside) E | **Back (Outside) F**

Front (Inside) G | **Back (Inside) H**

376.8”

48”

Trade Show Tower

Left (D) **Front (A)** **Right (B)** **Back (C)**

144”

48”